

ARCHITECTURAL SITE LUMINAIRE

LIMINAL POLE-MOUNTED LIGHTING

SPEC SHEET

FSL FORM. STRUCTURE. LIGHT.

FSL-LIM-PM · Rev B · October 2026
PRELIMINARY · not for customer distribution
www.fsldesigns.com

ARCHITECTURAL SITE LUMINAIRE

LIMINAL POLE-MOUNTED LIGHTING

Designed for pedestrian, campus, municipal, and site lighting applications, the Liminal pole-mounted luminaire combines clean architectural form with scalable performance. Multiple mounting transitions, spans, and configurations allow designers to establish a consistent exterior lighting language across streetscapes, plazas, building entries, and pathways.

Span / Mounting Height	Small (2FT): 8′–16′ · Large (3FT): 16′–25′
Delivered Lumens	2,000–20,000 lm
Distributions	Type II (Narrow) · Type III (Wide) · Type IV (Forward Throw) · Type V (Symmetric)
Lens Options	Clear Performance Lens (CLR); Visual Comfort Frosted Solite Lens (CFT)
CCT	2700K · 3000K · 3500K · 4000K · Amber
CRI	80 CRI · 90 CRI
Rated Life (L70)	60,000 hrs
Warranty	5-Year Limited — 10-Year Available. Consult your FSL representative.

Turtle Friendly · IP66 Rated · Vandal Resistant Options · Night Sky Friendly · Build America Buy America BABA Compliant Options · Title 24 CA Compliant · UL 1598 CERTIFIED Certified by CSA Group for the U.S. and Canada — Luminaires for Indoor and Outdoor Use

CORE & GRAIN — SHARED 12-COLOR PALETTE

Core (COR) — smooth surface finish. **Grain (GRN)** — textured directional grain. Same 12 colors.

COR	GRN			COR	GRN		
		CAR	Carbon (Black)			CUR	Current
		GRA	Granite			CHR	Charred Stone
		RVR	River Rock			OVR	Overcast
		DRF	Drift (Silver)			LAU	Laurel
		SUN	Sunbaked (Bronze)			CHP	Chaparral
		CHK	Chalk (White)			CCL	Citrus Clay

OXIDE — 6 SPECIALTY COLORS

Weathered specialty surfaces. Oxide codes are exclusive to the **OXD** finish family.

FCT	Ferric Corten	VRD	Verdigris
SCT	Scoria Corten	DPW	Deep Water
BRK	Bark	NOC	Nocturne

CONFIGURATIONS



S1 Solo
Single head

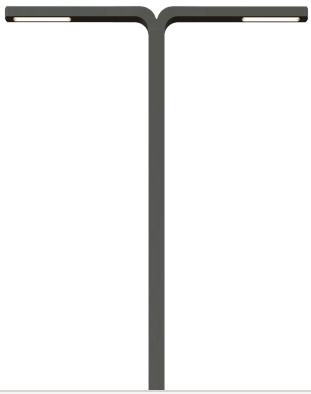

S2 Counterpoint
Opposed Mount, 180° — two identical heads; one catalog number



ST Offset / Staggered
Two catalog numbers required (L1 + L2)

CONFIGURATION DRAWINGS

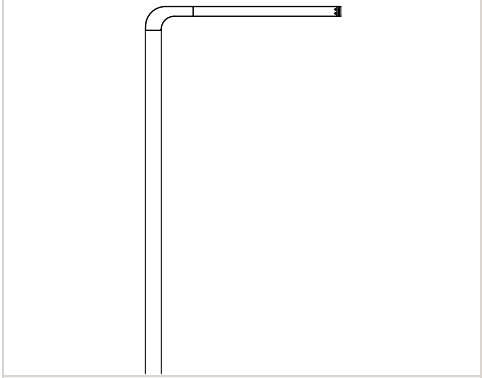

S1 Solo
Single fixture head at top of pole. Available in Small or Large span with all pole transitions. Most common configuration for pedestrian-scale lighting.

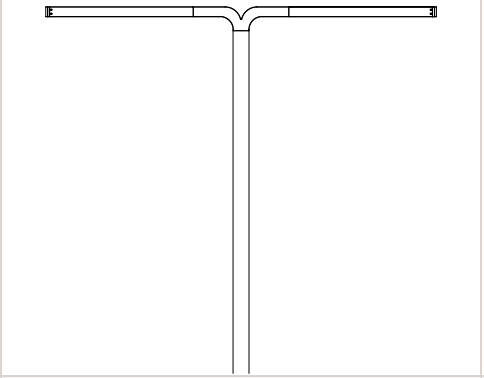

S2 Counterpoint
Two identical fixture heads mounted 180° apart at the top of pole. Specify one complete catalog number — L2 mirrors L1.

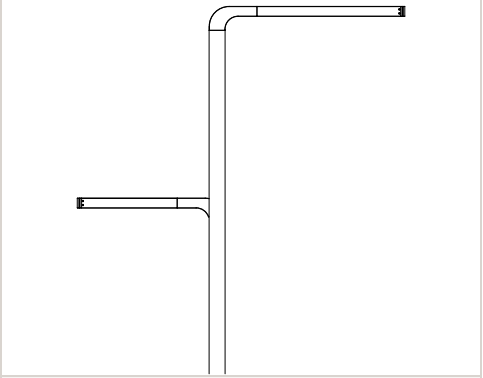

ST Offset
Staggered two-fixture system. L1 top; L2 secondary, lower. Specify secondary height AFF and orientation from handhole.

POLE TRANSITIONS

4″	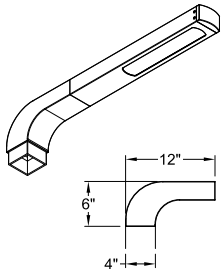	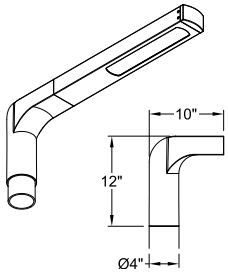	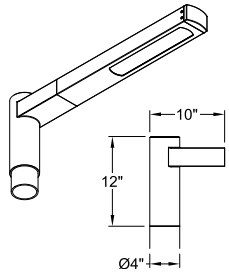
5″	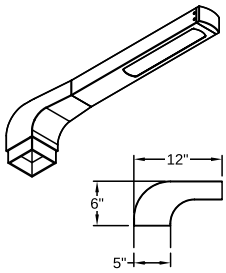	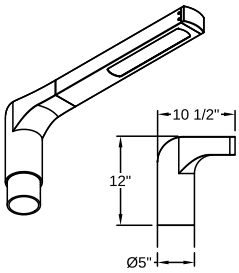	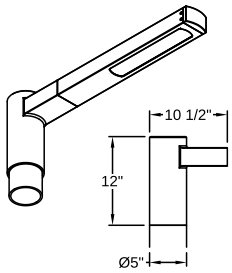
	SLF Square Lofted	**RLF Round Lofted**	**RPT Round Pass Through**

EPA REFERENCE

CATEGORY	CODE / ITEM	EPA VALUE	NOTES
Fixture Head	24″ Head	0.52	For preliminary pole coordination
Fixture Head	36″ Head	0.77	For preliminary pole coordination
Pole Transition	SLF	0.34	Square Lofted
Pole Transition	RLF	0.37	Round Lofted
Pole Transition	RPT	0.44	Round Pass Through

Note: EPA values are provided for preliminary pole and structural coordination. Final EPA may vary by configuration. Consult factory.

FIXTURE HEAD DIMENSIONAL

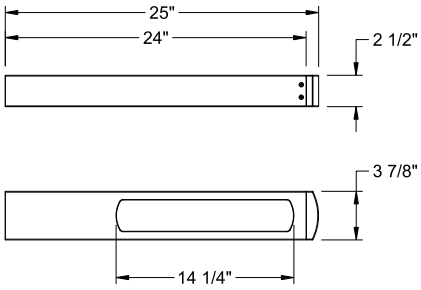

`LIM-S` **Small Span fixture head**
24″ fixture head · 25″ overall · 2 1/2″ H

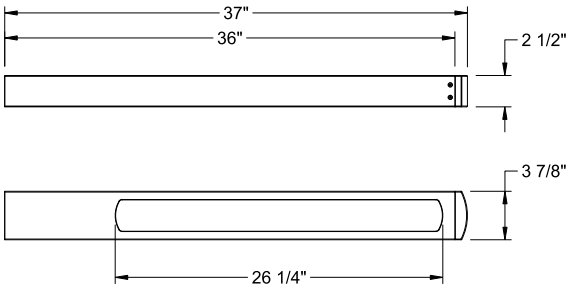

`LIM-L` **Large Span fixture head**
36″ fixture head · 37″ overall · 2 1/2″ H

CONSTRUCTION & MATERIALS

Housing	Sand-cast aluminum
Lens	CLR — clear acrylic performance lens · CFT — frosted Solite glass visual-comfort lens
Gasket	Silicone and closed-cell foam gaskets seal the fixture head to IP66
Fasteners / Hardware	Stainless steel hardware throughout

TECHNICAL DETAILS & COMPLIANCE

Driver	Integral, programmable, UL Class P. 0–10V dimming. Remote driver option available.
Input Voltage	120–277V · 347V and 480V via step-down transformer
Frequency	50/60 Hz
Power Factor	> 0.90 at full load
THD	< 20% at full load
Operating Temperature Range	–40°C to +55°C ambient
Controls	0–10V dimming, 10%–100% · PIR occupancy + daylight sensor, integrated per head (FOD) or pole-mounted (POD) · Button photocell · NEMA 3/7-pin photocell receptacle · Zhaga Book 18 (consult factory)
Color Consistency (SDCM)	3-step MacAdam ellipse
Surge Protection	Built into driver — ANSI C62.41 Category B · Optional SP surge protector: 20kV / 10kA (20kA max / 10kA nominal)
Location Rating	Wet location — UL 1598 · LED components evaluated to UL 8750
IP Rating	IP66
Impact Resistance Rating	PENDING
Listings & Certifications	CSA certified to UL 1598 / CSA C22.2 No. 250.0 (US & Canada) · IP66 per IEC 60529 · BABA compliant option · RoHS

CATALOG NUMBER — ORDERING GUIDE

PRIMARY LUMINAIRE LOCATION S1 and S2 mount at the top of the pole. For ST, L1 is fixed at the top of the pole, 180° from the handhole.

`LIM-S2-L-RLF-CFT-LM15-T3-30K-80-UNV-Z18-MG-SP-GRN-CAR`

LIM	S2	L	RLF	CFT	LM15	T3	30K	80	UNV	Z18	MG-SP	GRN	CAR
01 Family	02 Config	03 Span	04 Pole Trans.	05 Lens	06 Lumens	07 Dist.	08 CCT	09 CRI	10 Voltage	11 Controls	12 Options	13 Finish Fam.	14 Color

L1 REQUIRED Configuration S1 / S2 / ST. Use L1 for Solo, Counterpoint, or Offset primary luminaire.

LIM- 02 Config · 03 Span · 04 Pole Trans. · 05 Lens · 06 Lumens · 07 Dist. · 08 CCT · 09 CRI · 10 Voltage · 11 Controls · 12 Options · 13 Finish Fam. · 14 Color

01 LIMINAL FIXTURE HEAD

LIM	Liminal Fixture Head

02 CONFIGURATION

S1	Solo — single head
S2	Counterpoint / Opposed Mount, 180° — two identical heads; one catalog number
ST	Offset / Staggered — two catalog numbers required (L1 + L2)

03 SPAN (FIXTURE LENGTH)

S	Small / 2FT — MH 8′–16′
L	Large / 3FT — MH 16′–25′

04 POLE TRANSITION

SLF	Square Lofted Square pole with lofted fixture head transition.
RLF	Round Lofted Round pole with lofted fixture head transition.
RPT	Round Pass Through Round pole with pass-through fixture head transition.

05 LENS TYPE

CLR	Clear Performance Lens
CFT	Visual Comfort Lens

06 LUMEN PACKAGE

LM2	2,000 lm — Small only
LM4	4,000 lm — Small only
LM6	6,000 lm — Small only
LM8	8,000 lm — Small only
LM10	10,000 lm — Large only
LM12	12,500 lm — Large only
LM15	15,000 lm — Large only
LM20	20,000 lm — Large only

07 DISTRIBUTION

T2	Type II (Narrow)
T3	Type III (Wide)
T4	Type IV (Forward Throw)
T5	Type V (Symmetric)

08 CCT

27K	2700K
30K	3000K
35K	3500K
40K	4000K
AMB	Amber

09 CRI

80	80 CRI
90	90 CRI

10 VOLTAGE

UNV	120–277V
347	347V (step-down transformer)
480	480V (step-down transformer)

11 CONTROLS OPTIONAL

FOD	Integrated PIR Occupancy + Daylight Sensor (per head)
POD	Pole-Mounted PIR Occupancy + Daylight Sensor
PBC	Integrated Button Photocell
Z18	Zhaga Book 18 Receptacle (consult factory)
N7P	7-Pin NEMA Receptacle
N3P	3-Pin NEMA Receptacle

12 OPTIONS OPTIONAL

MG	Marine Grade Finish Enhanced corrosion resistance for coastal environments
SP	Surge Protection 20kV / 10kA — 20kA max / 10kA nominal
BLC	Backlight Control
VR	3G Vibration Rated
BABA	BABA Compliant Fixture

13 FINISH FAMILY

COR	Core — smooth surface
GRN	Grain — textured surface
OXD	Oxide — weathered specialty

14 FINISH COLOR

Core / Grain colors

CAR	Carbon (Black)	GRA	Granite
RVR	River Rock	DRF	Drift (Silver)
SUN	Sunbaked (Bronze)	CHK	Chalk (White)
CUR	Current	CHR	Charred Stone
OVR	Overcast	LAU	Laurel
CHP	Chaparral	CCL	Citrus Clay

Oxide colors

FCT	Ferric Corten	SCT	Scoria Corten
BRK	Bark	VRD	Verdigris
DPW	Deep Water	NOC	Nocturne

CATALOG NUMBER — ORDERING GUIDE

PRIMARY LUMINAIRE LOCATION S1 and S2 mount at the top of the pole. For ST, L1 is fixed at the top of the pole, 180° from the handhole.

CATALOG NUMBER BUILDER

L2 OFFSET ONLY

Only required when L1 configuration is ST. L2 must be Small Span. L1 is always 180 degrees from handhole and at the top of the pole. Only L2 requires a mounting height and orientation.

LIM- | 02 Config: ST | 03 Span: S | 05 Lens | 06 Lumens | 07 Dist. | 08 CCT | 09 CRI | 11 Control | 12 Options | 13 Mount Height | 16 Orientation

Inherited from L1 — not selectable on L2.

INHERITED FROM L1 NOT SELECTABLE

Family	LIM
Configuration	ST
Span	S (Small)
Pole Transition	Same as L1
Voltage	Same as L1
Pole Controls	Same as L1 (POD, PBC, Z18, N7P, N3P)
Options	Same as L1 (MG, SP, VR, BABA)
Finish Family	Same as L1
Finish Color	Same as L1

These fields come from the primary luminaire (L1) and are not part of the L2 catalog number.

05 LENS TYPE

CLR	Clear Performance Lens
CFT	Visual Comfort Lens

06 LUMEN PACKAGE

LM2	2,000 lm — Small only
LM4	4,000 lm — Small only
LM6	6,000 lm — Small only
LM8	8,000 lm — Small only

07 DISTRIBUTION

T2	Type II (Narrow)
T3	Type III (Wide)
T4	Type IV (Forward Throw)
T5	Type V (Symmetric)

08 CCT

27K	2700K
30K	3000K
35K	3500K
40K	4000K
AMB	Amber

09 CRI

80	80 CRI
90	90 CRI

11 CONTROLS OPTIONAL

FOD	Integrated PIR Occupancy + Daylight Sensor (per head)

12 OPTIONS OPTIONAL

BLC	Backlight Control

13 MOUNT HEIGHT

Enter in ½ ft increments. Use -6 for a half foot. Example: 12-6 = 12 ft 6 in.

_____ - ____

16 ORIENTATION

0DEG	90DEG
180DEG	270DEG

ORIENTATION FROM HANDHOLE

Clockwise from the handhole, viewed from above.

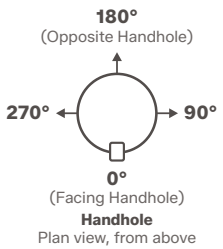

LOCATION & ORIENTATION NOTES

- Mount height is measured from the base of the pole to the center of the L2 luminaire.
- Use ½ ft increments: 12 = 12 ft, 12-6 = 12 ft 6 in.
- Orientation is measured clockwise from the handhole, viewed from above.
- L2 is only available in the Small (S) span.

EXAMPLE

`LIM-ST-S-CLR-LM4-T3-30K-90-FOD-12-6-90DEG`

= Small luminaire, clear lens, 4,000 lm, Type III, 3000K, 90 CRI, integrated occupancy + daylight sensor (FOD), mounted at 12 ft 6 in, 90° from handhole.

POLE ORDERING GUIDE

`SAR-14-5188-VD-GFI20/5-8/180DEG`

SAR	14	5188	VD	GFI20/5-8/180DEG
01 Series	02 Height	03 Shaft	04 Option	04 Option with location

= Straight aluminum round pole, 14 ft, 5″ shaft × .188″ wall, vibration dampener, 20A GFCI receptacle at 5 ft 8 in, 180° from the handhole.

Half-foot height: `SSS-20-6-507GA-EHH/2/270DEG` = Straight steel square pole, 20 ft 6 in, 5″ × 7-gauge, extra handhole at 2 ft, 270° from the handhole.

CATALOG NUMBER BUILDER — POLE

`01` – `02` – `03` – `04`

01 Pole Series · 02 Height · 03 Shaft Size · 04 Options (add as needed, separate with hyphens)

01 + 02 SERIES AND HEIGHT REQUIRED

	Round	Square	Heights
Aluminum	SAR — Straight Aluminum Round	SAS — Straight Aluminum Square	8–20 ft
Steel	SSR — Straight Steel Round	SSS — Straight Steel Square	20–30 ft
Fits luminaire	RLF or RPT	SLF	

Heights in feet; add -6 for a half foot: 20-6 = 20 ft 6 in.

03 SHAFT SIZE / WALL THICKNESS REQUIRED

CODE	SHAFT / WALL	SERIES	HEIGHTS
4188	4″ shaft × .188″ wall	SAR · SAS	8–16 ft
5188	5″ shaft × .188″ wall	SAR · SAS	10–20 ft
507GA	5″ shaft × 7-gauge (.179″) steel wall	SSR · SSS	20–30 ft

Shaft must match the series and height. See Pole EPA & Anchor Bolt Data for each combination.

04 POLE OPTIONS ADD AS NEEDED

CODE	OPTION	LOCATION REQUIRED	ENTER AS (EXAMPLE)	ENG. REVIEW
VD	Vibration Dampener		VD	
TP	Tamper-Resistant Handhole Cover Fasteners		TP	
BSS	Banner Saver Arms — Standard Size		BSS	✓
GFI20	20A GFCI receptacle	✓	GFI20/5-8/180DEG	
FMB	Festoon / Catenary Mounting Eye Bolt	✓	FMB/16/0DEG	✓
EHH	Extra Handhole	✓	EHH/2/270DEG	
FPH1 FPH2	Flag Pole Holder · Single (FPH1) or Double (FPH2)		FPH1 or FPH2	
PLH1 PLH2	Planter Hanger · Single (PLH1) or Double (PLH2)		PLH1 or PLH2	

✓ **Structural engineering review required for options — contact FSL before ordering.**

ORIENTATION FROM HANDHOLE

Clockwise from the handhole, viewed from above.

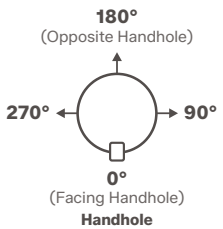

WRITING HEIGHTS & LOCATIONS

Height — Feet, then a hyphen and inches when needed.

`14` = 14 ft `20-6` = 20 ft 6 in

`5-8` = 5 ft 8 in

Location — Option / height / orientation, joined with slashes.

`GFI20/5-8/180DEG`

- Pole height and L2 mount height: ½ ft increments (-6).
- Option locations: any whole inch.
- All heights measured from the base of the pole.
- Orientation is clockwise from the handhole, viewed from above.
- Separate fields and multiple options with hyphens.

POLE DRAWINGS

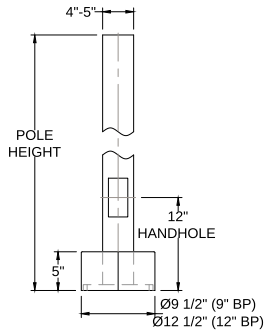

`POLE-ELEV`
Pole elevation — 4″–5″ shaft, 12″ handhole, 5″ base cover.

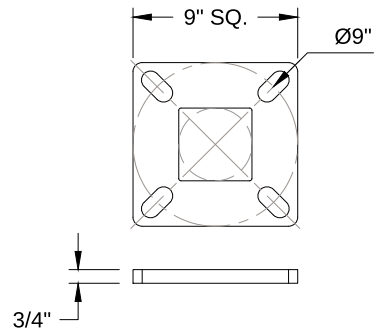

`POLE-BP9`
9″ SQ base plate, Ø9″ bolt circle, 3/4″ thick.
Used with: SAR 4188 · SAR 5188 · SAS 4188

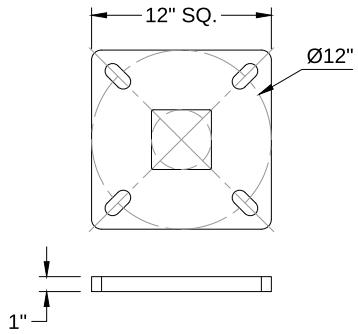

`POLE-BP12`
12″ SQ base plate, Ø12″ bolt circle, 1″ thick.
Used with: SAS 5188 · SSR / SSS 507GA

POLE EPA & ANCHOR BOLT DATA

HEIGHT	POLE DIA.	WALL THICKNESS	BASE PLATE	BOLT CIRCLE	BOLTS	90 MPH	100 MPH	110 MPH	120 MPH	130 MPH
SAR **ROUND ALUMINUM** Pole EPA — maximum EPA allowance, ft²										
8′	4″ OD	.188″	3/4″ x 9″ SQ	9.00″	3/4″ x 24″	19.6	16.8	14.9	13.0	10.3
10′	4″ OD	.188″	3/4″ x 9″ SQ	9.00″	3/4″ x 24″	13.9	11.6	9.0	8.8	6.8
10′	5″ OD	.188″	3/4″ x 9″ SQ	9.00″	3/4″ x 24″	27.1	23.1	20.8	18.4	15.1
12′	4″ OD	.188″	3/4″ x 9″ SQ	9.00″	3/4″ x 24″	7.6	5.8	4.8	3.6	2.4
12′	5″ OD	.188″	3/4″ x 9″ SQ	9.00″	3/4″ x 24″	14.8	11.4	8.7	6.9	5.6
14′	4″ OD	.188″	3/4″ x 9″ SQ	9.00″	3/4″ x 24″	6.4	4.7	3.9	2.7	Not rated
14′	5″ OD	.188″	3/4″ x 9″ SQ	9.00″	3/4″ x 24″	11.3	8.5	6.5	5.0	4.0
16′	4″ OD	.188″	3/4″ x 9″ SQ	9.00″	3/4″ x 24″	5.3	3.7	3.0	1.9	Not rated
16′	5″ OD	.188″	3/4″ x 9″ SQ	9.00″	3/4″ x 24″	11.8	9.0	8.2	6.9	5.6
18′	5″ OD	.188″	3/4″ x 9″ SQ	9.00″	3/4″ x 24″	9.2	6.8	6.2	5.1	4.2
20′	5″ OD	.188″	3/4″ x 9″ SQ	9.00″	3/4″ x 24″	7.2	5.0	4.6	3.7	3.0
SAS **SQUARE ALUMINUM** Pole EPA — maximum EPA allowance, ft²										
10′	4″ SQ	.188″	3/4″ x 9″ SQ	9.00″	3/4″ x 24″	28.6	23.5	22.2	19.2	15.9
10′	5″ SQ	.188″	1″ x 12″ SQ	12.00″	1″ x 36″	42.5	35.4	33.6	29.6	24.5
12′	4″ SQ	.188″	3/4″ x 9″ SQ	9.00″	3/4″ x 24″	21.0	16.4	15.2	12.4	10.2
12′	5″ SQ	.188″	1″ x 12″ SQ	12.00″	1″ x 36″	35.0	27.6	25.6	20.8	17.2
14′	4″ SQ	.188″	3/4″ x 9″ SQ	9.00″	3/4″ x 24″	17.0	13.2	12.0	9.6	7.8
14′	5″ SQ	.188″	1″ x 12″ SQ	12.00″	1″ x 36″	28.6	22.4	20.6	16.6	13.6
16′	4″ SQ	.188″	3/4″ x 9″ SQ	9.00″	3/4″ x 24″	13.8	10.6	9.6	7.6	6.0
16′	5″ SQ	.188″	1″ x 12″ SQ	12.00″	1″ x 36″	23.8	18.4	16.8	13.4	10.8
18′	5″ SQ	.188″	1″ x 12″ SQ	12.00″	1″ x 36″	19.4	14.8	13.4	10.4	8.2
20′	5″ SQ	.188″	1″ x 12″ SQ	12.00″	1″ x 36″	15.8	11.8	10.6	8.0	6.0

Wind-speed columns = maximum pole EPA allowance (ft²). Preliminary — confirm with project structural engineer.

POLE EPA & ANCHOR BOLT DATA

HEIGHT	POLE DIA.	WALL THICKNESS	BASE PLATE	BOLT CIRCLE	BOLTS	90 MPH	100 MPH	110 MPH	120 MPH	130 MPH	140 MPH
SSR **ROUND STEEL**	Pole EPA — maximum EPA allowance, ft²										
20′	5″ OD	7-Gauge	1″ x 12″ SQ	12.00″	1″ x 36″	20.6	15.8	14.6	12.2	10.2	8.6
22′	5″ OD	7-Gauge	1″ x 12″ SQ	12.00″	1″ x 36″	19.4	14.2	13.1	11.0	9.1	7.2
25′	5″ OD	7-Gauge	1″ x 12″ SQ	12.00″	1″ x 36″	13.4	9.8	9.0	7.4	6.0	5.0
30′	5″ OD	7-Gauge	1″ x 12″ SQ	12.00″	1″ x 36″	8.6	5.8	5.2	4.0	3.2	2.4
SSS **SQUARE STEEL**	Pole EPA — maximum EPA allowance, ft²										
20′	5″ SQ	7-Gauge	1″ x 12″ SQ	12.00″	1″ x 36″	28.6	22.0	20.2	16.2	13.0	10.4
25′	5″ SQ	7-Gauge	1″ x 12″ SQ	12.00″	1″ x 36″	19.0	14.2	12.8	9.6	7.2	5.4
28′	5″ SQ	7-Gauge	1″ x 12″ SQ	12.00″	1″ x 36″	16.5	11.5	10.3	7.1	6.8	3.1
30′	5″ SQ	7-Gauge	1″ x 12″ SQ	12.00″	1″ x 36″	12.6	8.8	7.6	5.2	3.2	1.8

Wind-speed columns are the maximum pole EPA allowance (ft²). Total fixture + transition EPA (see EPA Reference) must not exceed the value shown. Values are for preliminary pole selection; final pole and foundation design to be confirmed by the project structural engineer. Consult factory.

ANCHOR BOLT PROJECTION

SHAFT BASE SIZE	BOLT CIRCLE (RANGE)	BOLT PROJECTION	BASE DIAMETER	TEMPLATE PART NO.	ANCHOR BOLT (D × L × HOOK)	APPLIES TO
4″ — 9″ plate	Awaiting OEM	Awaiting OEM	Awaiting OEM	Awaiting OEM	Awaiting OEM	9″ SQ plate — SAR 4188, SAS 4188
5″ — 9″ plate	Awaiting OEM	Awaiting OEM	Awaiting OEM	Awaiting OEM	Awaiting OEM	SAR 5188 (round aluminum)
5″ — 12″ plate	Awaiting OEM	Awaiting OEM	Awaiting OEM	Awaiting OEM	Awaiting OEM	SAS 5188 (square aluminum), SSR / SSS 507GA (steel)

PHOTOMETRIC DATA

PERFORMANCE DATA

DISTRIBUTION REFERENCE

T2 TYPE II

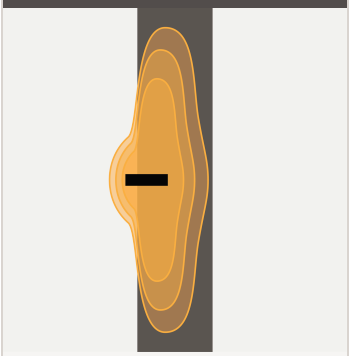

Asymmetric. Roadway, walkway, and pathway edge applications.

T3 TYPE III

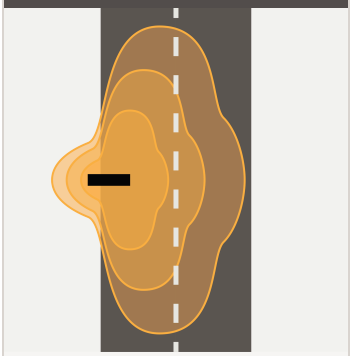

Asymmetric. Wider roadway, parking, and pedestrian-area coverage.

T4 TYPE IV

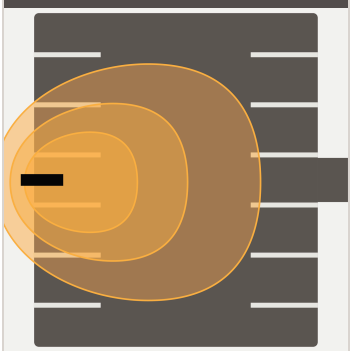

Forward throw. Perimeter, edge, and one-sided applications.

T5 TYPE V

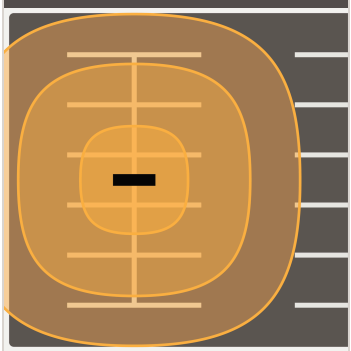

Symmetric. Equal coverage in all directions for plazas and center-mounted area lighting.

BUG Note: BUG Rating = B Backlight · U Uplight · G Glare. Rated per ANSI/IES TM-15. All distributions rated B0-U0; zero backlight, zero uplight.

PHOTOMETRIC INFORMATION

LUMEN PACKAGE	DRIVE CURRENT [MA]	DELIVERED OUTPUT [LM]	EFFICACY [LM/W]	BUG RATING	TYPICAL POWER 120/277V [W]	IES REFERENCE
T2 TYPE II PERFORMANCE Type II, 4000K, 80 CRI, Clear Performance Lens						
Small Span / 2FT — recommended mounting height 8′–16′						
LM2 2,000 lm	—	2,000	111	Pending IES	18	LIM-S-CLR-LM2-T2
LM4 4,000 lm	—	4,000	114	Pending IES	35	LIM-S-CLR-LM4-T2
LM6 6,000 lm	—	6,000	118	Pending IES	51	LIM-S-CLR-LM6-T2
LM8 8,000 lm	—	8,000	121	Pending IES	66	LIM-S-CLR-LM8-T2
Large Span / 3FT — recommended mounting height 16′–25′						
LM10 10,000 lm	—	10,000	125	Pending IES	80	LIM-L-CLR-LM10-T2
LM12 12,500 lm	—	12,500	130	Pending IES	96	LIM-L-CLR-LM12-T2
LM15 15,000 lm	—	15,000	127	Pending IES	118	LIM-L-CLR-LM15-T2
LM20 20,000 lm	—	20,000	125	Pending IES	160	LIM-L-CLR-LM20-T2

PHOTOMETRIC INFORMATION

LUMEN PACKAGE	DRIVE CURRENT [MA]	DELIVERED OUTPUT [LM]	EFFICACY [LM/W]	BUG RATING	TYPICAL POWER 120/277V [W]	IES REFERENCE
T3 TYPE III PERFORMANCE Type III, 4000K, 80 CRI, Clear Performance Lens						
Small Span / 2FT — recommended mounting height 8′–16′						
LM2 2,000 lm	—	2,000	111	Pending IES	18	LIM-S-CLR-LM2-T3
LM4 4,000 lm	—	4,000	114	Pending IES	35	LIM-S-CLR-LM4-T3
LM6 6,000 lm	—	6,000	118	Pending IES	51	LIM-S-CLR-LM6-T3
LM8 8,000 lm	—	8,000	121	Pending IES	66	LIM-S-CLR-LM8-T3
Large Span / 3FT — recommended mounting height 16′–25′						
LM10 10,000 lm	—	10,000	125	Pending IES	80	LIM-L-CLR-LM10-T3
LM12 12,500 lm	—	12,500	130	Pending IES	96	LIM-L-CLR-LM12-T3
LM15 15,000 lm	—	15,000	127	Pending IES	118	LIM-L-CLR-LM15-T3
LM20 20,000 lm	—	20,000	125	Pending IES	160	LIM-L-CLR-LM20-T3
T4 TYPE IV PERFORMANCE Type IV, 4000K, 80 CRI, Clear Performance Lens						
Small Span / 2FT — recommended mounting height 8′–16′						
LM2 2,000 lm	—	2,000	111	Pending IES	18	LIM-S-CLR-LM2-T4
LM4 4,000 lm	—	4,000	114	Pending IES	35	LIM-S-CLR-LM4-T4
LM6 6,000 lm	—	6,000	118	Pending IES	51	LIM-S-CLR-LM6-T4
LM8 8,000 lm	—	8,000	121	Pending IES	66	LIM-S-CLR-LM8-T4
Large Span / 3FT — recommended mounting height 16′–25′						
LM10 10,000 lm	—	10,000	125	Pending IES	80	LIM-L-CLR-LM10-T4
LM12 12,500 lm	—	12,500	130	Pending IES	96	LIM-L-CLR-LM12-T4
LM15 15,000 lm	—	15,000	127	Pending IES	118	LIM-L-CLR-LM15-T4
LM20 20,000 lm	—	20,000	125	Pending IES	160	LIM-L-CLR-LM20-T4
T5 TYPE V PERFORMANCE Type V, 4000K, 80 CRI, Clear Performance Lens						
Small Span / 2FT — recommended mounting height 8′–16′						
LM2 2,000 lm	—	2,000	111	Pending IES	18	LIM-S-CLR-LM2-T5
LM4 4,000 lm	—	4,000	114	Pending IES	35	LIM-S-CLR-LM4-T5
LM6 6,000 lm	—	6,000	118	Pending IES	51	LIM-S-CLR-LM6-T5
LM8 8,000 lm	—	8,000	121	Pending IES	66	LIM-S-CLR-LM8-T5
Large Span / 3FT — recommended mounting height 16′–25′						
LM10 10,000 lm	—	10,000	125	Pending IES	80	LIM-L-CLR-LM10-T5
LM12 12,500 lm	—	12,500	130	Pending IES	96	LIM-L-CLR-LM12-T5
LM15 15,000 lm	—	15,000	127	Pending IES	118	LIM-L-CLR-LM15-T5
LM20 20,000 lm	—	20,000	125	Pending IES	160	LIM-L-CLR-LM20-T5