

ARCHITECTURAL BOLLARD LUMINAIRE

LIMINAL BOLLARD LIGHTING

SPEC SHEET

FSL FORM. STRUCTURE. LIGHT.

FSL-LIM-BLD · Rev B · October 2026
PRELIMINARY · not for customer distribution
www.fsldesigns.com

ARCHITECTURAL BOLLARD LUMINAIRE

LIMINAL BOLLARD LIGHTING

Designed for pedestrian walkways, plazas, and building entries, the Liminal Bollard combines clean architectural form with scalable LED performance. Three body expressions — Center, Reach, and Ease — allow designers to establish a cohesive exterior lighting language across a wide range of site conditions.

Heights	30″ · 36″ · 42″
Delivered Lumens	500–2,000 lm
Distributions	Type I (Bilateral) · Type II (Narrow) · Type III (Wide) · Type IV (Forward Throw) · Type V (Symmetric)
Lens Options	Clear Performance Lens (CLR); Visual Comfort Frosted Solite Lens (CFT)
CCT	2700K · 3000K · 3500K · 4000K · Amber
CRI	80 CRI · 90 CRI
Rated Life (L70)	60,000 hrs
Warranty	5-Year Limited — 10-Year Available. Consult your FSL representative.

Turtle Friendly · IP66 Rated · Vandal Resistant Options · Night Sky Friendly · Build America Buy America BABA Compliant Options · Title 24 CA Compliant · UL 1598 CERTIFIED Certified by CSA Group for the U.S. and Canada — Luminaires for Indoor and Outdoor Use

CORE & GRAIN — SHARED 12-COLOR PALETTE

Core (COR) — smooth surface finish. **Grain (GRN)** — textured directional grain. Same 12 colors.

COR / GRN		COR / GRN	
CAR	Carbon (Black)	CUR	Current
GRA	Granite	CHR	Charred Stone
RVR	River Rock	OVR	Overcast
DRF	Drift (Silver)	LAU	Laurel
SUN	Sunbaked (Bronze)	CHP	Chaparral
CHK	Chalk (White)	CCL	Citrus Clay

OXIDE — 6 SPECIALTY COLORS

Weathered specialty surfaces. Oxide codes are exclusive to the **OXD** finish family.

FCT	Ferric Corten	VRD	Verdigris
SCT	Scoria Corten	DPW	Deep Water
BRK	Bark	NOC	Nocturne

BODY STYLES



C Center
Straight vertical form — define the space



R Reach
Forward slanting form — engage the space



E Ease
Backward leaning form — comfort the space

HEIGHT REFERENCE

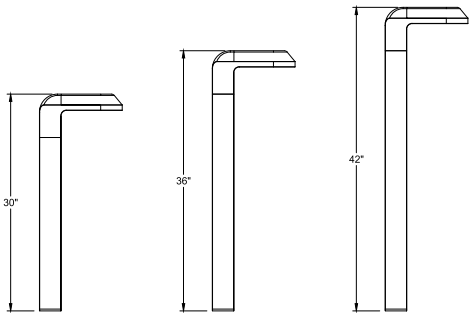

H30 30″ · H36 36″ · H42 42″

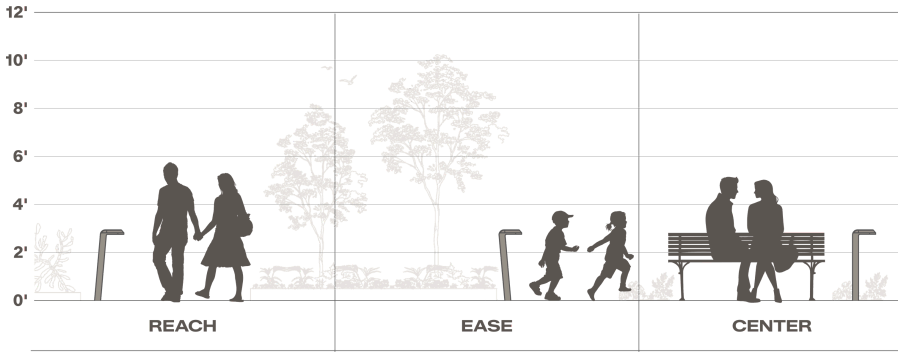

Liminal Bollards shown at 36″

BODY STYLE DRAWINGS

Define the space	Engage the space	Comfort the space
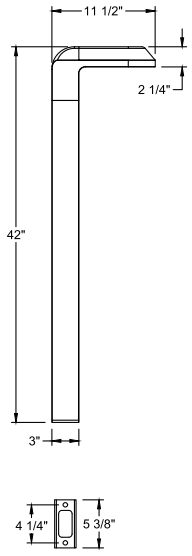	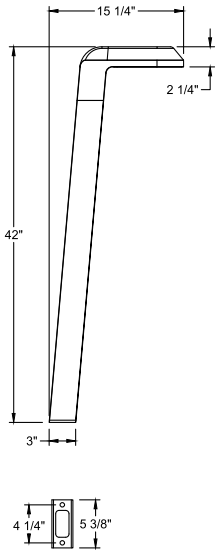	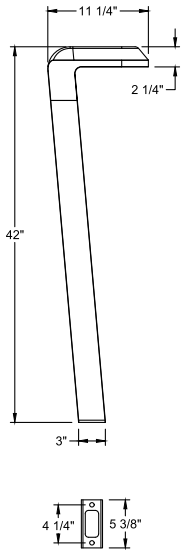
C Center Straight vertical shaft · 11 1/2″ overall width · shown at 42″	**R Reach** Forward slanting body · 15 1/4″ overall width · shown at 42″ **Reach is available for planter installation only.**	**E Ease** Backward leaning body · 11 1/4″ overall width · shown at 42″

MOUNTING

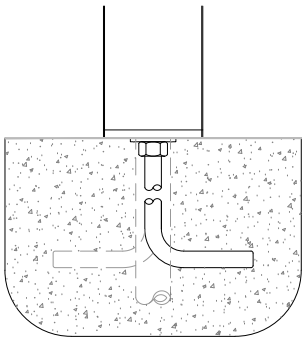

SM **Surface Mount**
Base plate anchors to finished paving. Anchor bolt pattern per FSL submittal.

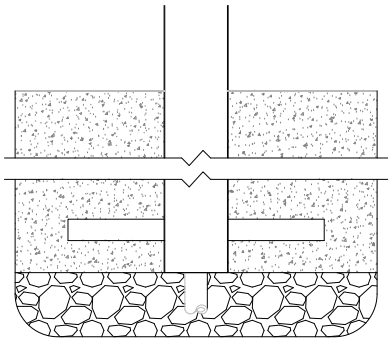

EM **Embedded / Direct Burial**
Shaft set in concrete; no visible base plate. Consult factory for embedment depth and column sizing.

CONSTRUCTION & MATERIALS

Housing	Sand-cast aluminum head · extruded aluminum body
Lens	CLR — clear acrylic performance lens · CFT — frosted Solite glass visual-comfort lens
Gasket	Silicone and closed-cell foam gaskets seal the fixture head to IP66
Fasteners / Hardware	Stainless steel hardware throughout

TECHNICAL DETAILS & COMPLIANCE

Driver	Integral, programmable, UL 8750 Class P / Class 2. Tri-Mode dimming (0–10V or phase-cut).
Input Voltage	120–277V · 347V and 480V via step-down transformer
Frequency	50/60 Hz
Power Factor	> 0.90 at full load
THD	< 20% at full load
Operating Temperature Range	–40°C to +50°C ambient
Controls	0–10V dimming, 1%–100% · TRIAC/ELV phase-cut dimming (120V only) · Concealed microwave motion sensor (MWS) · Button photocell (PBC)
Color Consistency (SDCM)	3-step MacAdam ellipse
Surge Protection	Built into driver — 2kV line-to-line / 2kV line-to-ground (IEC 61000-4-5), ANSI C62.41 Category A · Optional SP surge protector: 10kV / 5kA (10kA max / 5kA nominal)
Location Rating	Wet location — UL 1598 · LED components evaluated to UL 8750
IP Rating	IP66
Impact Resistance Rating	PENDING
Listings & Certifications	CSA certified to UL 1598 / CSA C22.2 No. 250.0 (US & Canada) · IP66 per IEC 60529 · BABA compliant option · RoHS

CATALOG NUMBER — ORDERING GUIDE

`LIMB-C-H42-SM-CFT-LM08-T3-30K-80-UNV-MWS-MG-SP-GRN-CAR`

LIMB	C	H42	SM	CFT	LM08	T3	30K	80	UNV	MWS	MG-SP	GRN	CAR
01 Family	02 Body Style	03 Height	04 Mounting	05 Lens	06 Lumens	07 Dist.	08 CCT	09 CRI	10 Voltage	11 Controls	12 Options	13 Finish Fam.	14 Color

CATALOG NUMBER BUILDER

LIMB- 02 Body Style - 03 Height - 04 Mounting - 05 Lens - 06 Lumens - 07 Dist. - 08 CCT - 09 CRI - 10 Voltage - 11 Controls - 12 Options - 13 Finish Fam. - 14 Color

01 PRODUCT FAMILY

LIMB	Liminal Bollard

02 BODY STYLE

C	Center Straight vertical form — define the space
R	Reach Forward slanting — engage the space · planter installation only
E	Ease Backward leaning — comfort the space

03 HEIGHT

H30	30″ bollard
H36	36″ bollard
H42	42″ bollard

04 MOUNTING METHOD

SM	Surface Mount
EM	Embedded / Direct Burial

05 LENS TYPE

CLR	Clear Performance Lens
CFT	Visual Comfort Lens

11 CONTROLS OPTIONAL

MWS	Concealed Integrated Microwave Motion Sensor Occupancy-based adaptive dimming
PBC	Integrated Button Photocell

06 LUMEN PACKAGE

LM05	500 lm
LM08	800 lm
LM10	1,000 lm
LM15	1,500 lm
LM20	2,000 lm

07 DISTRIBUTION

T1	Type I (Bilateral)
T2	Type II (Narrow)
T3	Type III (Wide)
T4	Type IV (Forward Throw)
T5	Type V (Symmetric)

08 CCT

27K	2700K
30K	3000K
35K	3500K
40K	4000K
AMB	Amber CRI not applicable — specify 80

09 CRI

80	80 CRI
90	90 CRI

10 VOLTAGE

UNV	120–277V
347	347V (step-down transformer)
480	480V (step-down transformer)

12 OPTIONS OPTIONAL

MG	Marine Grade Finish Enhanced corrosion resistance for coastal environments
SP	Surge Protection 10kV / 5kA — 10kA max / 5kA nominal
GFI20	20A GFCI weather-resistant duplex receptacle with while-in-use cover Consult factory for availability and location
BABA	BABA Compliant Fixture

13 FINISH FAMILY

COR	Core — smooth surface
GRN	Grain — textured surface
OXD	Oxide — weathered specialty

14 FINISH COLOR

Core / Grain colors

CAR	Carbon (Black)	GRA	Granite
RVR	River Rock	DRF	Drift (Silver)
SUN	Sunbaked (Bronze)	CHK	Chalk (White)
CUR	Current	CHR	Charred Stone
OVR	Overcast	LAU	Laurel
CHP	Chaparral	CCL	Citrus Clay

Oxide colors

FCT	Ferric Corten	SCT	Scoria Corten
BRK	Bark	VRD	Verdigris
DPW	Deep Water	NOC	Nocturne

PHOTOMETRIC DATA

PERFORMANCE DATA

T1 TYPE I

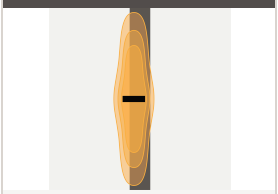

Bilateral. Narrow paths and walkways, light both directions.

T2 TYPE II

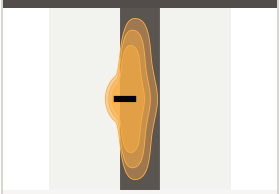

Asymmetric. Sidewalks and pathway edges.

T3 TYPE III

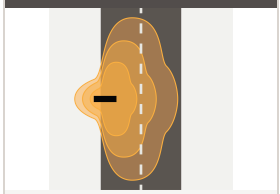

Wide asymmetric. Entries, plazas, and broader pedestrian zones.

T4 TYPE IV

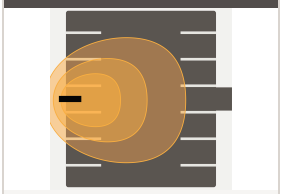

Forward throw. Perimeters, building approaches, one-sided paths.

T5 TYPE V

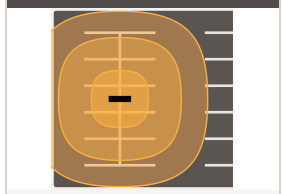

Symmetric. Courtyards, plazas, and central placement.

PHOTOMETRIC INFORMATION

4000K, 80 CRI, Clear Performance Lens, 42" bollard

LUMEN PACKAGE	DRIVE CURRENT [MA]	DELIVERED OUTPUT [LM]	EFFICACY [LM/W]	BUG RATING	TYPICAL POWER 120/277V [W]	IES REFERENCE
T1 TYPE I PERFORMANCE						
LM05 500 lm	—	500	100	B0-U0-G0	5	LIMB-CLR-LM05-T1
LM08 800 lm	—	800	100	B0-U0-G0	8	LIMB-CLR-LM08-T1
LM10 1,000 lm	—	1,000	111	B0-U0-G1	9	LIMB-CLR-LM10-T1
LM15 1,500 lm	—	1,500	107	B0-U0-G1	14	LIMB-CLR-LM15-T1
LM20 2,000 lm	—	2,000	118	B0-U0-G1	17	LIMB-CLR-LM20-T1
T2 TYPE II PERFORMANCE						
LM05 500 lm	—	500	100	B0-U0-G0	5	LIMB-CLR-LM05-T2
LM08 800 lm	—	800	100	B0-U0-G0	8	LIMB-CLR-LM08-T2
LM10 1,000 lm	—	1,000	111	B0-U0-G1	9	LIMB-CLR-LM10-T2
LM15 1,500 lm	—	1,500	107	B0-U0-G1	14	LIMB-CLR-LM15-T2
LM20 2,000 lm	—	2,000	118	B0-U0-G1	17	LIMB-CLR-LM20-T2
T3 TYPE III PERFORMANCE						
LM05 500 lm	—	500	100	B0-U0-G0	5	LIMB-CLR-LM05-T3
LM08 800 lm	—	800	100	B0-U0-G0	8	LIMB-CLR-LM08-T3
LM10 1,000 lm	—	1,000	111	B0-U0-G1	9	LIMB-CLR-LM10-T3
LM15 1,500 lm	—	1,500	107	B0-U0-G1	14	LIMB-CLR-LM15-T3
LM20 2,000 lm	—	2,000	118	B0-U0-G1	17	LIMB-CLR-LM20-T3
T4 TYPE IV PERFORMANCE						
LM05 500 lm	—	500	100	B0-U0-G0	5	LIMB-CLR-LM05-T4
LM08 800 lm	—	800	100	B0-U0-G0	8	LIMB-CLR-LM08-T4
LM10 1,000 lm	—	1,000	111	B0-U0-G1	9	LIMB-CLR-LM10-T4
LM15 1,500 lm	—	1,500	107	B0-U0-G1	14	LIMB-CLR-LM15-T4
LM20 2,000 lm	—	2,000	118	B0-U0-G1	17	LIMB-CLR-LM20-T4
T5 TYPE V PERFORMANCE						
LM05 500 lm	—	500	100	B0-U0-G0	5	LIMB-CLR-LM05-T5
LM08 800 lm	—	800	100	B0-U0-G0	8	LIMB-CLR-LM08-T5
LM10 1,000 lm	—	1,000	111	B0-U0-G1	9	LIMB-CLR-LM10-T5
LM15 1,500 lm	—	1,500	107	B0-U0-G1	14	LIMB-CLR-LM15-T5
LM20 2,000 lm	—	2,000	118	B0-U0-G1	17	LIMB-CLR-LM20-T5

Preliminary — pending certified IES files. Values shown are the same for each distribution until each type is tested. **BUG:** BUG Rating = B Backlight · U Uplight · G Glare. Rated per ANSI/IES TM-15. All distributions rated B0-U0; zero backlight, zero uplight.